Manual

CMF 20/30

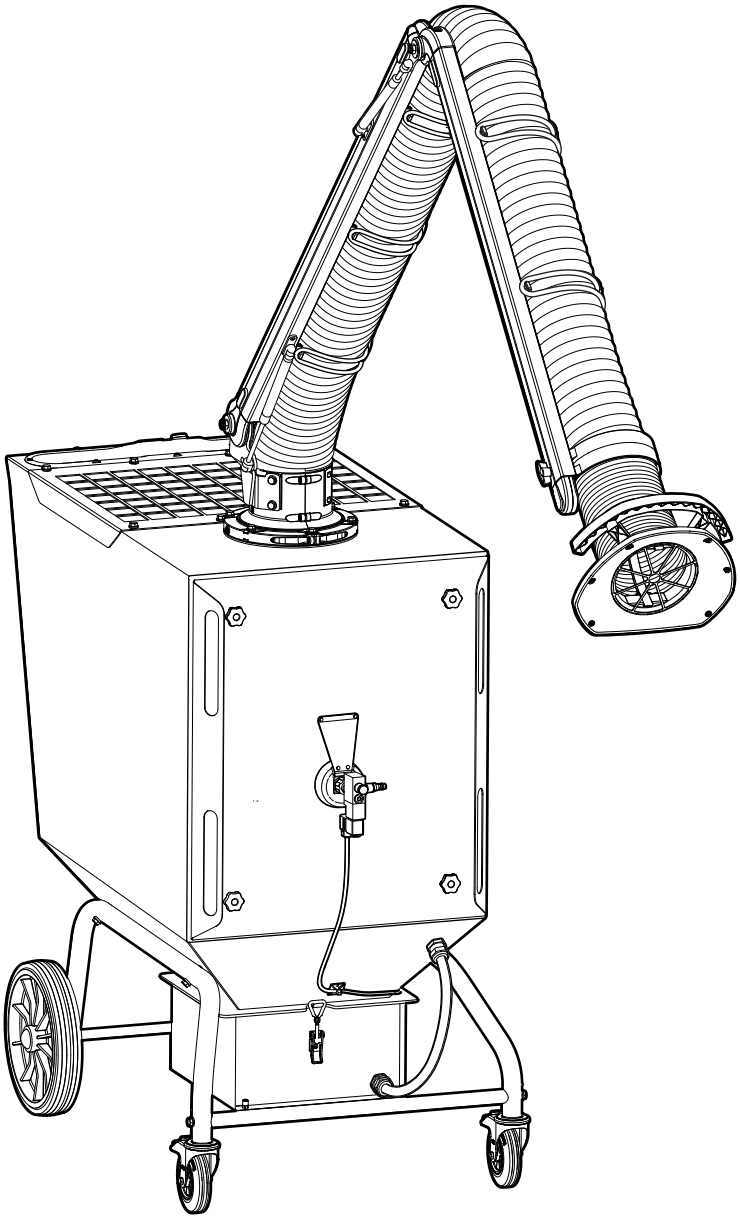

FUMEX

PURE ADVANTAGE

TABLE OF CONTENTS

1 Introduction 3
1.1 The manual 3
1.2 Declaration 3
1.3 Warranty 3
1.4 Manufacturer 3

2 Safety 4
2.1 General 4
2.2 Warning levels (on product) 4
2.3 Safety signs 4
2.4 Protective equipment 4
2.5 General warnings & information 4

3 Product Description 5
3.1 Serial number & product name 5
3.2 Labels and safety signs 5
3.3 Areas of Use 6
3.4 Design 6
3.5 Function 7

4 Preparation for use 8
4.1 Transport & storage 8
4.2 Electrical equipment 8
4.3 Assembly & installation 8
4.3.1 Unpacking 8
4.3.2 Extraction arm 8

5 Commissioning 11
5.1 Start-up 11

6 Operation 12
6.1 Moving the machine 12
6.2 Control panel 12
6.3 Navigation Panel 13
6.3.1 Settings 13
6.3.2 Maintenance 14
6.3.3 Information 15
6.4 Filter cleaning 16
6.4.1 Automatic filter cleaning 16
6.4.2 Forced filter cleaning 16

7 Troubleshooting 17
7.1 Troubleshooting guide 17

8 Maintenance 18
8.1 Cleaning 18
8.2 Maintenance schedule 18
8.3 Replacing the filter cartridge 19
8.3.1 Removal 19
8.3.2 Assembly 20
8.4 Emptying the dust collector 21
8.5 Extraction arm 22
8.6 Checking air connections 22

9 Decommissioning 22
9.1 Final decommissioning/disassembly/disposal 22

10 Technical information 23
10.1 Technical data 23
10.2 Circuit diagram electronics 24
10.3 Exploded-view drawing 25
10.3.1 Filter unit CMF 20 25
10.3.2 Filter unit CMF 30 26
10.3.3 Extraction Arm 27

11 Accessories & Spare Parts 28

12 Notes 30

© Fumex AB, 2025
Subject to change.

Foreword

FUMEX operates in the environmental technology sector and specialises in extraction arms, fans, and filters for all work environments. The company strives to create work environments free from airborne contaminants.

Our products are manufactured using modern methods and undergo extensive quality inspections. The products comply with applicable safety and environmental requirements.

If you have any questions about FUMEX or our products, please contact your dealer or the FUMEX sales department.

1 Introduction

1.1 The manual

To ensure your knowledge of the product, you must read this manual before use.

The information in this manual is intended to facilitate the installation, operation, maintenance, troubleshooting, and repair of the product. The manual also provides the user with a technical understanding and basic safety instructions to minimise risks when working with the product, as well as to increase the product's service life.

The manual should be considered a part of the product and should always be accessible and in close proximity to the product.

The following symbols are referred to in the manual:

Safety instructions (applicable to people or machinery) that must always be adhered to. Risk of death or risk of personal injury or damage to property.

Recommendations which convey important information for an optimally functioning product.

1.2 Declaration

The product is CE certified and complies with all applicable regulations, directives and standards.

For a full EC Declaration, please contact FUMEX.

1.3 Warranty

To preserve the validity of the warranty, it is forbidden to modify or re-engineer the product during the warranty period without first obtaining prior approval from FUMEX. This is also applicable to any spare parts used which do not correspond to the manufacturer's specifications.

Damage caused by improper use of the product will result in:

- the warranty being voided
- the EC Declaration and CE certification being voided.

The warranty period is one year from the date of purchase and covers the product and its constituent parts. All manufacturing defects are covered by the warranty. FUMEX replaces defective parts in accordance with NL 17.

FUMEX is not liable for any consequential or incidental damage, or any loss of income as a result of or in connection with the warranty case.

The onus is on the buyer to select the appropriate product for the intended use. Any modifications to the FUMEX product or its intended use will void the warranty.

1.4 Manufacturer

FUMEX AB
Tel. no.: +46 910-361 80
Email: info@fumex.se

G:a Burträskvägen 48
SE-931 92 Skellefteå
Sweden

2 Safety

2.1 General

The product is safe to use. It is designed in such a way that hazardous parts are only located in inaccessible areas. Even so, if the product is not used correctly or as intended, it may be hasardous to the user or cause damage to the product. The user should therefore be informed and trained to handle the product's safety features.

2.2 Warning levels (on product)

Safety signs on FUMEX products make use of colour codes and signal words in accordance with ISO 3864-2.

DANGER **Red (DANGER)** – used to indicate an imminently dangerous situation which, if not avoided, will result in death or serious personal injury.

WARNING **Orange (WARNING)** - used to indicate a potentially dangerous situation which, if not avoided, may result in death or serious personal injury.

CAUTION **Yellow (CAUTION)** - used to indicate a potentially dangerous situation which, if not avoided, may result in moderate or minor personal injury.

2.3 Safety signs

Refer to **3.2 Labels and safety signs.**

2.4 Protective equipment

No special protective equipment is required to use the product. However, personal protective equipment such as safety glasses, respiratory protection, and safety gloves must be worn when replacing filter cartridges and emptying the dust collector.

2.5 General warnings & information

The product must not be modified.

The product must not be operated without safety devices.

Power to the machine must be switched off prior to maintenance, repair, or adjustment.

The machine may only be used in perfect technical condition and according to its intended use as described in Section **3.3 Areas of Use** Faults that may jeopardise safety must be rectified immediately.

Work on the machine's electrical equipment may only be carried out by a licenced electrician in accordance with applicable local electrical safety regulations.

There is always risk associated with the machine's moving parts (e.g. cutting, clamping or gripping points).

In the event of fire, hatches or service doors must not be opened.

Under no circumstances may water be used to extinguish/cool in the event of fire or heat build-up. A powder extinguisher or other suitable extinguisher must be used instead.

The machine must not be used in a potentially explosive atmosphere or to extract dust and gases in explosive concentrations.

Air containing sparks must not be drawn into the extraction arm. If welding is performed which generates a large amount of sparks, a spark arrestor must be used (refer to Chapter **11 Accessories & Spare Parts**).

All work on the machine must be carried out by certified and authorised personnel.

The machine must not be used in confined areas without exhaust ventilation.

For maintenance work where contact with dust occurs, personal protective equipment such as safety glasses, respiratory protection, and safety gloves must be worn.

The surface on which the machine is used should be flat and smooth.

The machine should only be used by personnel with good knowledge of the machine and its operation.

Waste disposal must be carried out in accordance with the relevant national regulations.

3 Product Description

3.1 Serial number & product name

Refer to the product nameplate.

3.2 Labels and safety signs

Safety signs that are missing or illegible must be replaced before the machine is used.

According to **Fig. 1.**

1. Decal on terminal for wiring
2. Fumex logotype
3. Safety sign
   "Unplug before opening hatch"
4. Decal with W3 approval
5. Nameplate
6. Motor rotation arrow
7. Fumex logotype

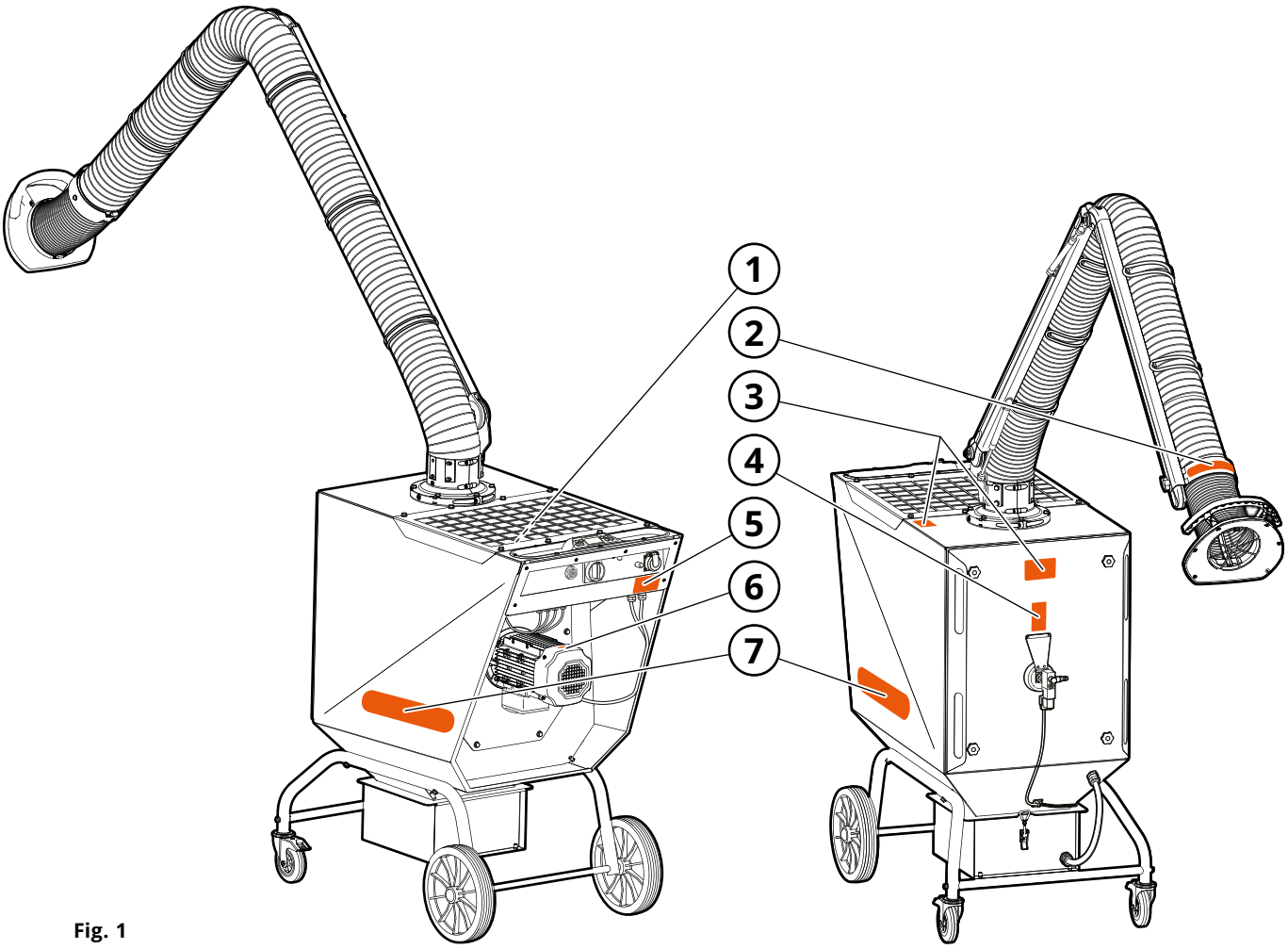

Fig. 1

3.3 Areas of Use

The CMF filter unit is designed for the extraction and filtration of welding fumes indoors, in accordance with ISO 21904-1, -2.

3.4 Design

See **Fig. 2**.

1. Extraction arm
2. Damper
3. Swivel
4. Exhaust grille
5. Hood
6. Filter hatch
7. Distribution plate
8. Dirty side
9. Filter cartridge
10. Compressed air inlet*
11. Pneumatic valve*
12. Filter brush
13. Nozzle*
14. Straining compartment
15. Pressure distribution hose
16. Dust collector
17. Lockable caster wheels
18. Filter motor
19. Control panel
20. HEPA-filter/Silencer CMF SI**
21. Clean side
22. Impeller
23. Fan motor
24. Wheel

** Only applies to CMF 30*
*** Accessorie*

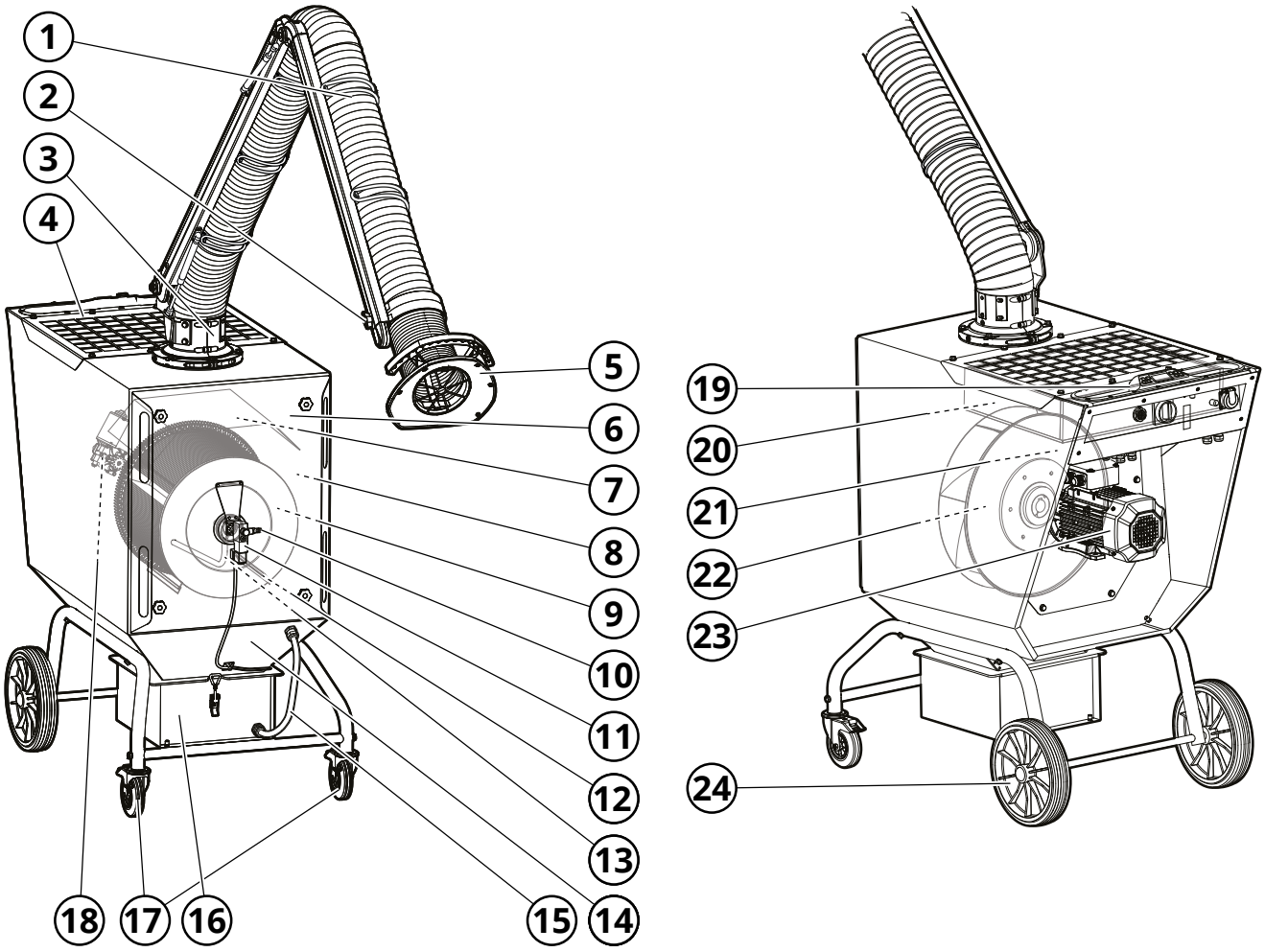

Fig. 2

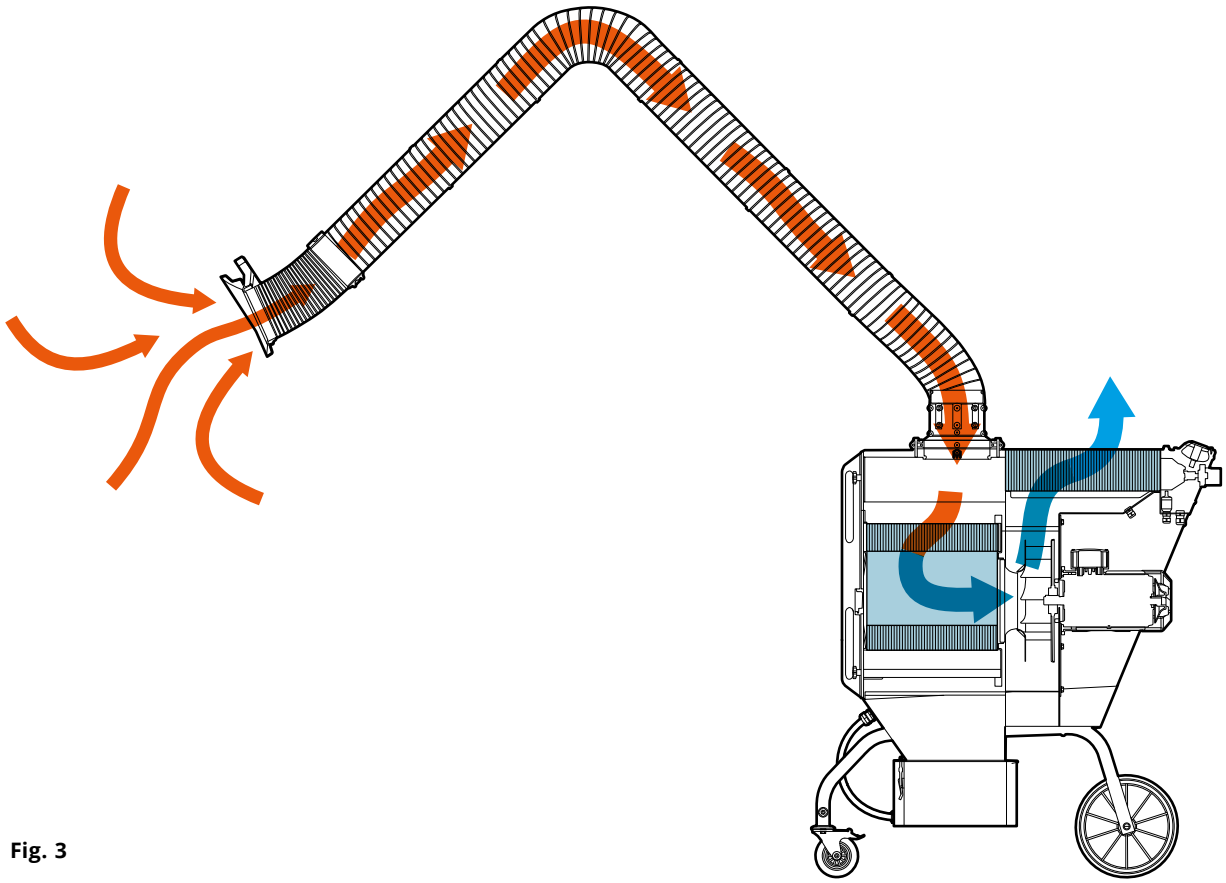

Fig. 3

3.5 Function

The CMF 20 and CMF 30 are mobile filter units with a built-in fan and top-mounted extraction arm for purging dust-filled and contaminated air in ventilated workshop environments.

Contaminated air is drawn in via the extraction arm (1, **Fig. 1**) to the dirty side of the machine (8), where the air is cleansed through the filter cartridge (9). The degree of filtering is ≥ 99% for smoke and dust contamination from the welding of high-alloy steels, such as steel with a nickel and chromium content of 30% or higher. The clean air is then drawn through the impeller (22) and discharged from the clean side of the filter unit (21) through the exhaust grate (4).

When the filter is in need of cleaning, a filter motor (17) automatically starts that rotates the filter cartridge against brushes (12), releasing the attached dust. In addition, the CMF 30 is equipped with a nozzle (13) that blows compressed air from within the filter at the same time as the filter motor rotates the filter cartridge, making cleaning even more efficient. The straining compartment (14) then conveys the dust into the dust collector (16).

On the control panel (19) there is a navigation panel, switch, pliers sensor connection and 230 VAC socket with a miniature circuit breaker (see section **6.2 Control panel**). The control panel also functions as a handle when moving and usable surface area.

The extraction arm is mounted on a 360° swivel and has external supporting arms. The upper joints are equipped with gas springs that balance the arm's own weight and resistance is regulated in each joint. The hood (5) is designed for maximum suction efficiency and is ideal for capturing welding fumes. A damper at the hood attachment regulates the airflow.

The filter unit is equipped with lockable caster wheels (18).

Accessories include a spark trap, silencer, pliers sensor and HEPA filter. See chapter **11 Accessories & Spare Parts.**

4 Preparation for use

4.1 Transport & storage

Protect the machine and its parts from rain, snow, aggressive atmospheres and other harmful effects.

4.2 Electrical equipment

Faults in the electrical system must be rectified immediately.

Check all external wires as well as the power switch, light, timer and motor for visible external damage. Repair any damage immediately.

4.3 Assembly & installation

National rules and regulations must always be adhered to during assembly work.

4.3.1 Unpacking

1. Remove the packaging and slowly roll the product off the pallet.
2. Check for any damage and missing parts. Contact a local Fumex representative directly if there is damage or parts are missing.
3. Dispose of the packaging material according to local recycling regulations.

4.3.2 Extraction arm

Mount the extraction arm on the assembly as shown in **Fig. 4 to Fig. 14**.

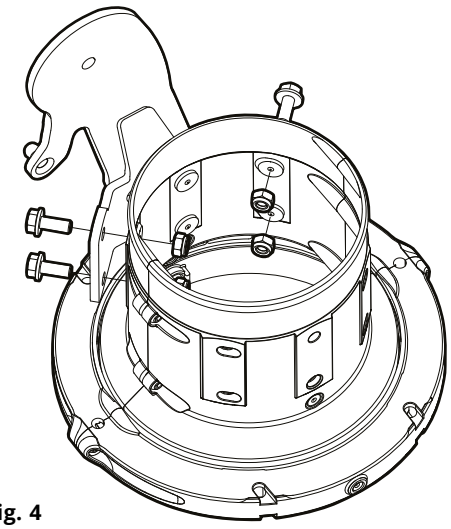

Fig. 4

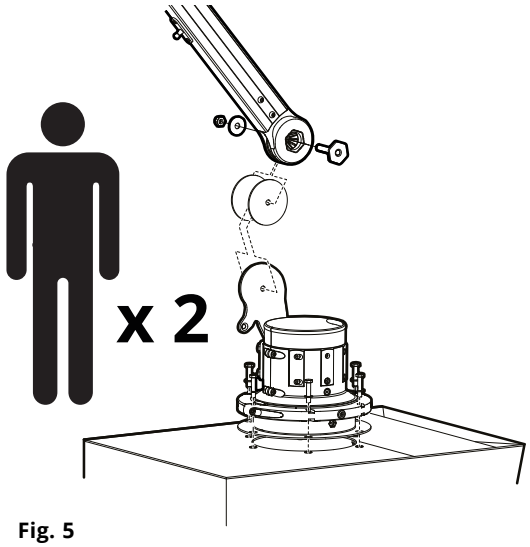

Fig. 5

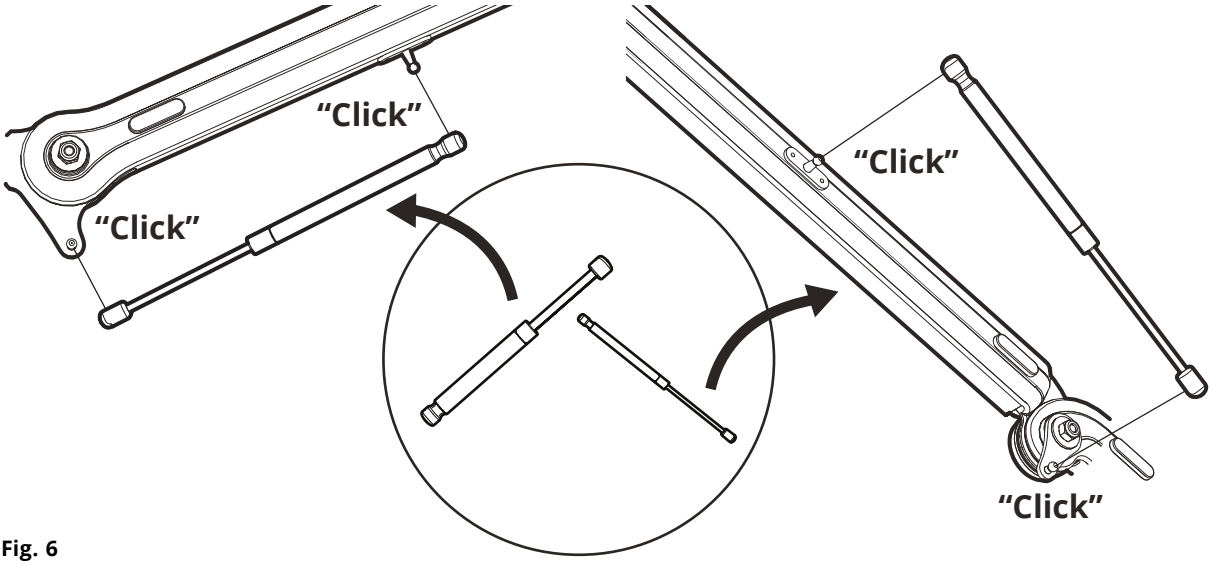

Fig. 6

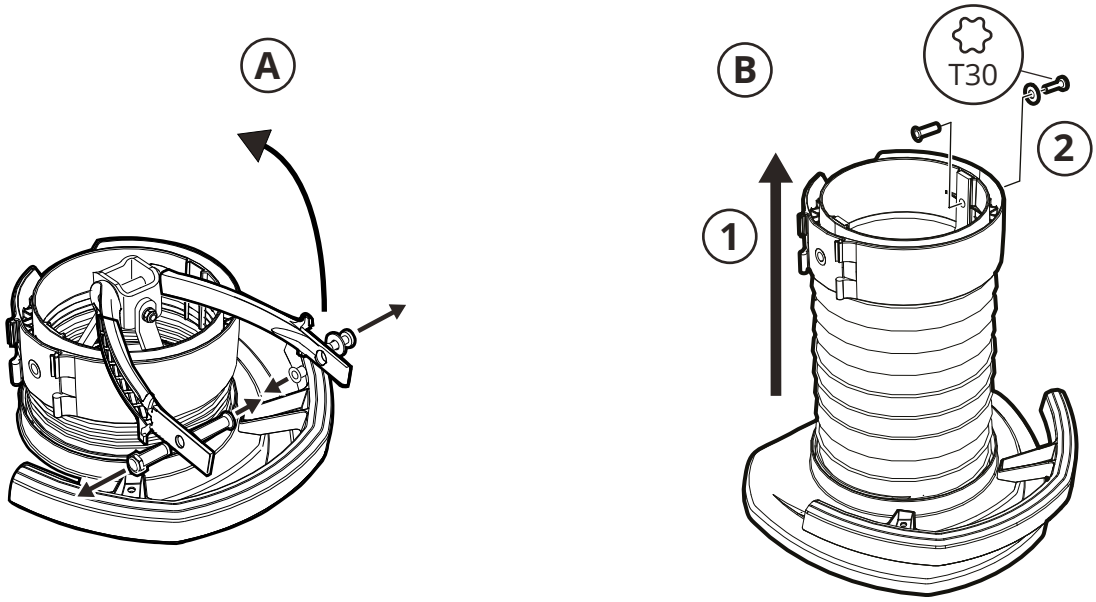

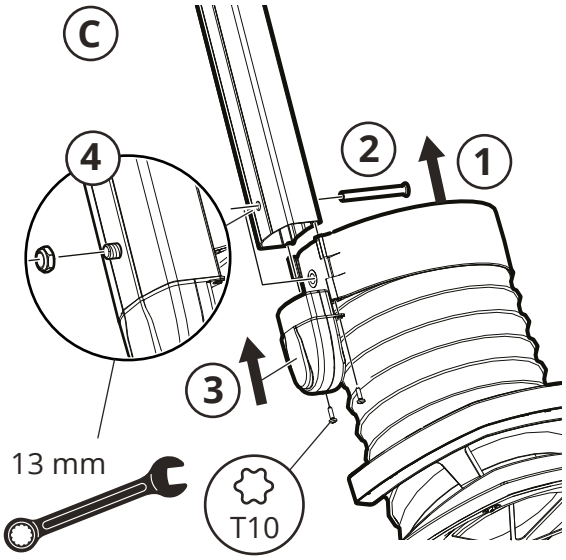

Fig. 7

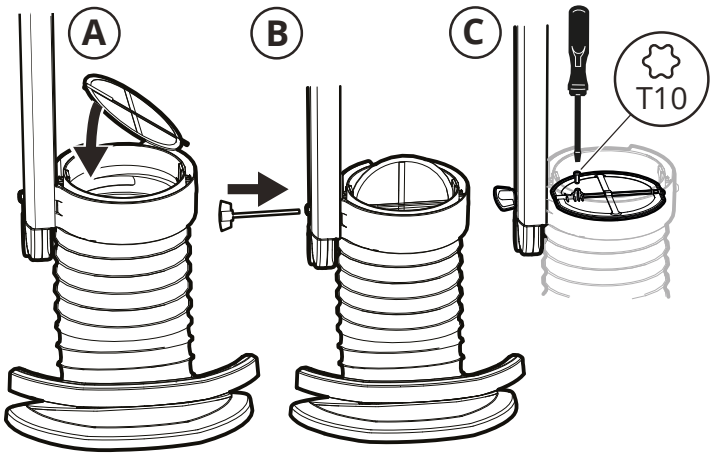

Fig. 8

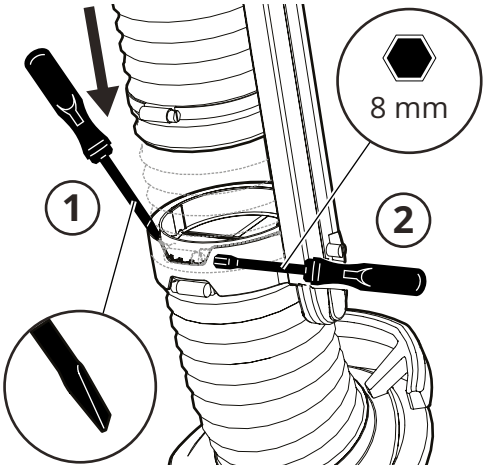

Fig. 9

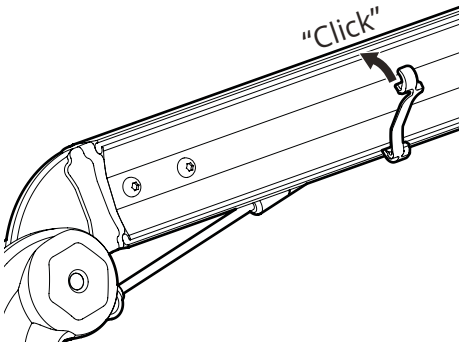

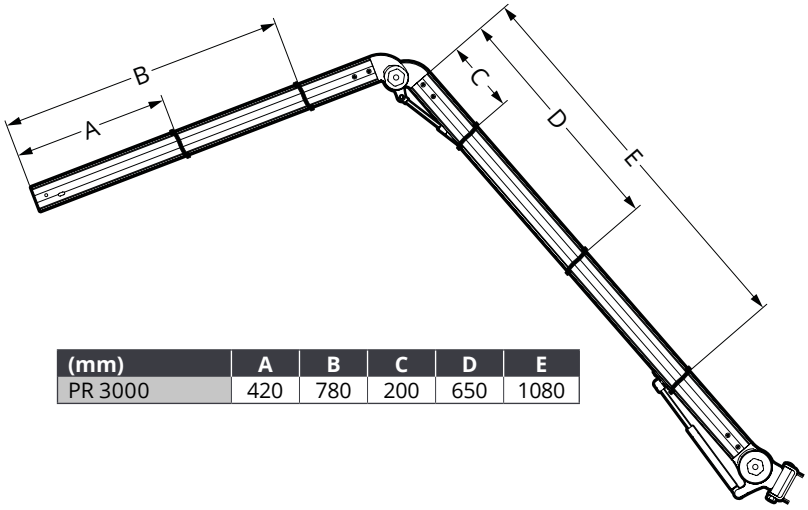

(mm)	A	B	C	D	E
PR 3000	420	780	200	650	1080

Fig. 10

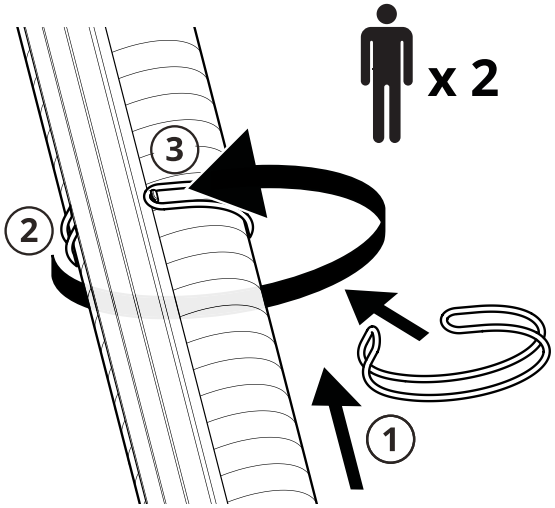

Fig. 11

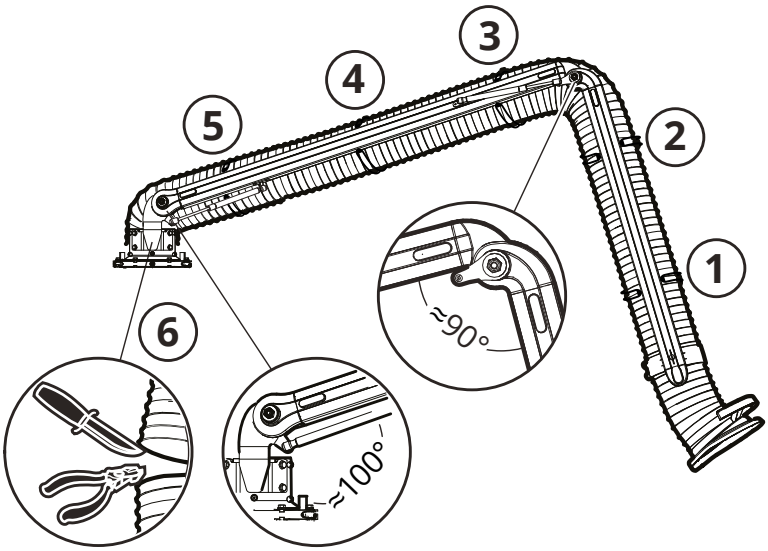

Fig. 12

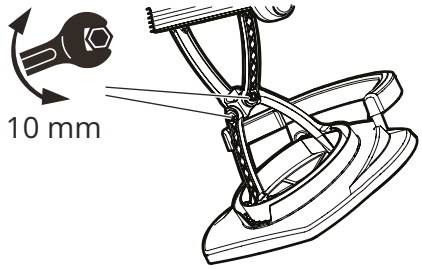

Fig. 13

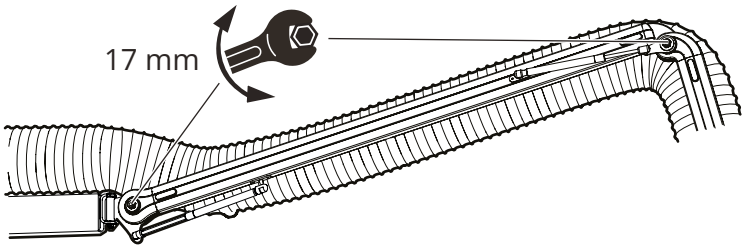

Fig. 14

5 Commissioning

5.1 Start-up

Any faults must be rectified before turning on the power.

1. Connect the plug to the wall socket.

2. Start the machine.

If the machine turns off automatically, the power consumption is too high. Please contact FUMEX.

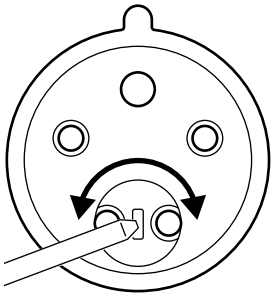

Fig. 15

3. Check the rotational direction of the fan motor. The fan motor rotation direction is checked by starting the fan, then stopping the fan. When the speed decreases, you can see which way your engine rotates through the hood for the fan cooling (where the decal is located, according to **Fig. 1**, pos. 6).
If the direction of rotation is incorrect, use a flat screwdriver to reverse the phase on the plug as shown in **Fig. 15**.

4. Check the rotational direction again.

5. Turn off the fan.

The mobile filter unit is now ready for operation.

6 Operation

The fan motor generates heat and is equipped with a cooling fan. The cooling fan inlet is located at the back of the motor. Do not block the inlet.

Note that electronic equipment is always sensitive to static electricity, high humidity, high temperature, and grid disruption.

6.1 Moving the machine

Inclined surfaces

When moving the machine on steeply inclined surfaces, using the handles in the filter hatch will reduce the risk of the caster wheels turning the machine with the incline.

Thresholds and obstacles

At thresholds or minor obstacles, place a foot on the rear wheel axle, grip the handles in the top panel, and gently tip up the front section to cross the obstacle without knocking the front wheels.

6.2 Control panel

Se **Fig. 16.**

1. Control panel
2. Display
3. Navigation panel
4. Audiable alarm
5. Power switch
6. Connector for Pliers Sensor
7. Circuit breaker 230 V socket
8. 230 V socket

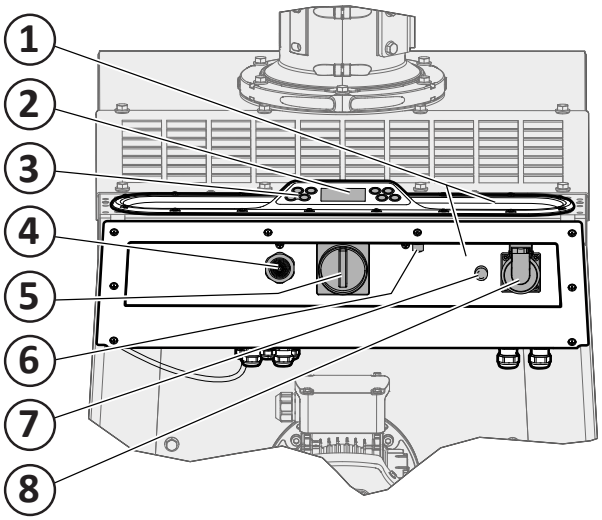

Fig. 16

On the control panel (**Fig. 16**) there is a navigation panel, switch, pliers sensor connection and 230 VAC socket with a miniature circuit breaker. The control panel also functions as a handle when moving and usable surface area.

Power switch

The machine is turned on with the switch (5).

Navigation panel and display

The buttons on the navigation panel (3) are used to switch between functions and for making operational settings. The display (2) shows operation and settings. (see section **6.3 Navigation Panel**).

Audiable alarm

The need for filter cleaning is indicated by the audible alarm (4), the flashing warning indicator (2, **Fig. 17**), and by the normal operation indicator light (3) going out on the control panel. When the pressure drop reaches 1600 Pa, the audiable alarm signals that the filter cartridge is in need of cleaning. If the alarm is ignored and filter cleaning is not performed, there is a risk that the airflow may drop below the minimum flow (~600 m^3/h).

Pliers sensor connection

For connection of pliers sensor, with automatic start/stop of extraction during welding.

Pliers sensors are available as accessories; see chapter **11 Accessories & Spare Parts**.

Miniature circuit breaker

Resettable fuse for 230 V socket.

230 V socket

For connection of power tools, with automatic start/stop of extraction.

6.3 Navigation Panel

See **Fig. 17.**

1. Start/stop button, fan
2. Warning indicator (Filter status)
3. Operation indicator
4. Button for forced filter cleaning
5. Filter status
6. Display
7. Escape button
8. Enter button
9. Navigation button
10. Navigation button

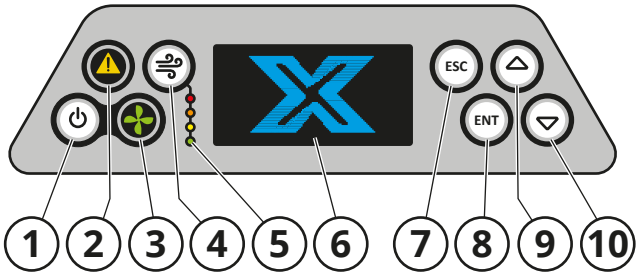

Fig. 17

When the machine is turned on with the switch (5, **Fig. 16**), the display (6, **Fig. 17**) lights up. When the display shows SETTINGS and MAINTENANCE, the navigation panel is ready for use. The fan is started/stopped with the Start/Stop fan button (1) and operation is indicated by the operation indicator (3). If the airflow is too low, the operation indicator goes out, the warning indicator (2) flashes, and the audible alarm sounds.

6.3.1 Settings

When the display shows

Press **ENT**. The main menu is displayed.

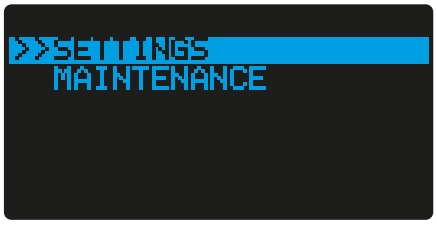

Press **ENT** to access the settings.

Press the navigation buttons to access the desired setting. Press **ENT** to enable the selection.

6.3.1.1 Language

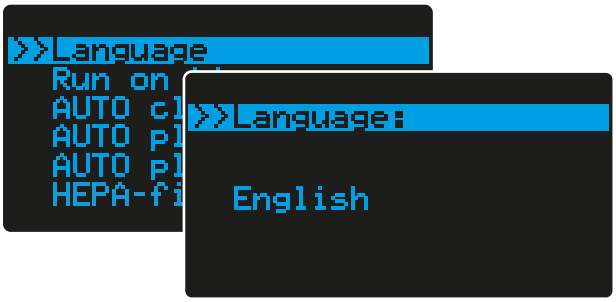

Setting for selecting the language to be shown on the display.

Selection is made with the navigation buttons. Press **ENT** to confirm the selected setting.

After settings are made, press **ESC** to go to the main menu.

6.3.1.2 After-run time

Setting together with AUTO pliers sensor for evacuating welding fumes after welding. The time is selected at intervals of 15 seconds with the navigation buttons. The normal after-run time for welding is 15 seconds.

Press **ENT** to confirm the selected setting.

6.3.1.3 Automatic filter cleaning

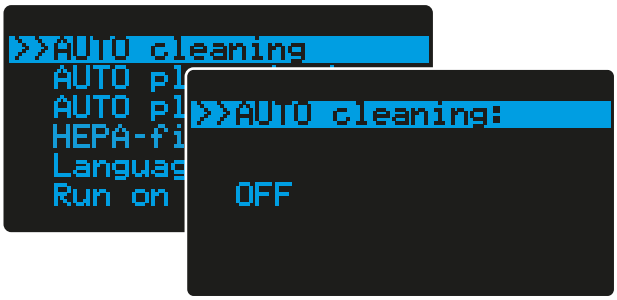

AUTO cleaning. Setting for performing automatic filter cleaning during operation, see **6.4 Filter cleaning**. Selection is made with the navigation button.

Press **ENT** to confirm the selected setting.

6.3.1.4 Automatic START/STOP, 230 V socket

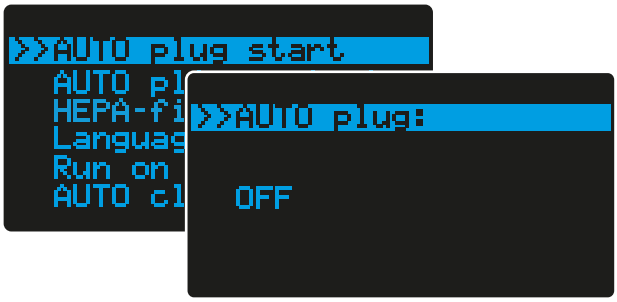

Auto plug start. Setting to start and stop the fan motor with a tool, e.g. an angle grinder, connected to 230 V socket (pos 8, **Fig. 16**). Selection is made with the navigation button.

Press **ENT** to confirm the selected setting.

6.3.1.5 Automatic START/STOP, pliers sensor

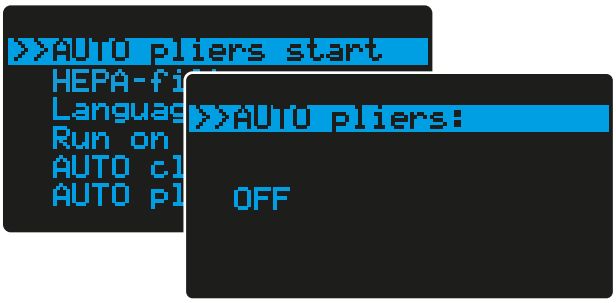

Auto plier start. Setting to start and stop the fan motor during welding with a connected pliers sensor attached to the workpiece. Selection is made with the navigation button.

Press **ENT** to confirm the selected setting.

The after-run time setting for extraction of smoke after welding is accessed via the menu option ”After-run time”; see section **6.3.1.2 After-run time**.

6.3.1.6 HEPA-filter - ON/OFF

When installing/uninstalling the HEPA-filter, activate/deactivate the HEPA function of the filter unit. Press **ENT** to select ON/OFF.

Press **ESC** to return to the menu.

6.3.2 Maintenance

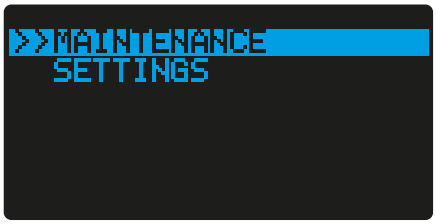

On the main menu, select MAINTENANCE with the navigation button.

Press **ENT** to access maintenance.

Press the navigation buttons to access the desired menu. Press **ENT** to enable the selection.

6.3.2.1 Filter cartridge - Operating time

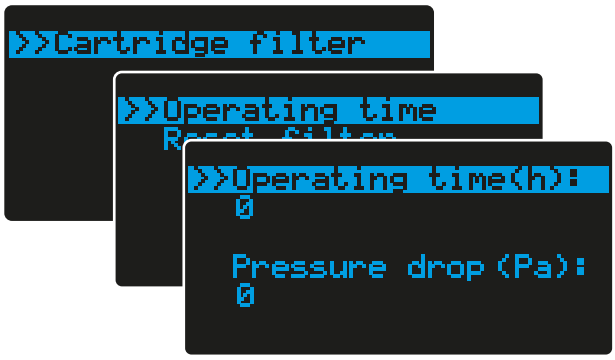

Provides information about the operating time of the filter cartridge and the current pressure drop in the airflow.

Press **ESC** to return to the menu.

6.3.2.2 Filter cartridge - Reset operating time

Reset filter. To reset the operating time after fitting a new filter cartridge.

Press **ESC** to return to the menu.

6.3.3 Information

When the warning indicator lights, an information text is shown on the display.

6.3.3.1 Check contactor circuit breaker

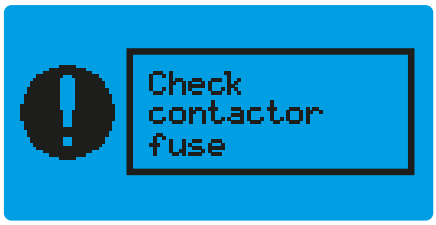

Overcurrent circuit breaker has tripped. Please contact Fumex.

6.3.3.2 Check filter motor

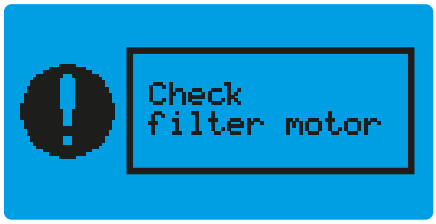

Check function of filter motor.

6.3.3.3 Check suction tube

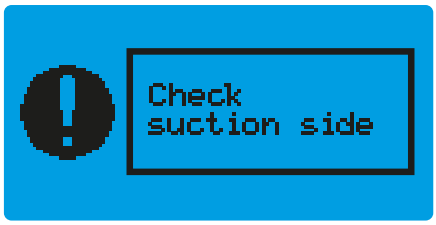

Too low airflow < 600 m³/h. If the audiable alarm sounds but the indicator lights on the control panel indicate that the filter is not tight, the damper in the extraction arm may be closed or there may be another obstruction in the airflow.

6.3.3.4 Replace filter cartridge

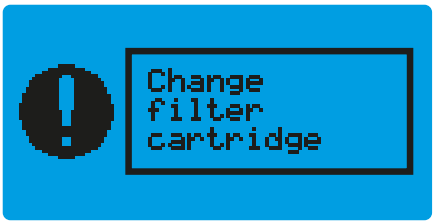

The filter cartridge is clogged. Fit new; see section **8.3 Replacing the filter cartridge**. Reset the operating time; see section **6.3.2.2 Filter cartridge - Reset operating time**.

6.3.3.5 Replace HEPA filter

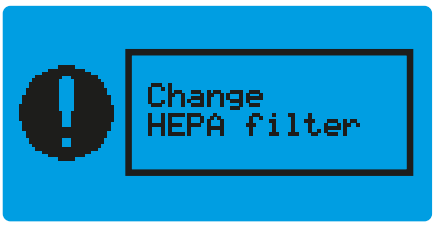

The HEPA filter is clogged. Fit new.

6.4 Filter cleaning

6.4.1 Automatic filter cleaning

With selection of **AUTO cleaning ON** in the settings menu, filter cleaning is automatic during operation. Automatic filter cleaning is performed between preset pressure drops. The Filter status indicator lights on the control panel (**Fig. 17,** pos 5) show the degree of contamination of the filter medium. Offline cleaning is also performed 20 minutes after the fan motor is switched off. When the filter cartridge is clogged and the airflow too low, the audiable alarm and warning indicator (2) are triggered.

6.4.2 Forced filter cleaning

If after repeated cleaning, the audiable alarm is still sounding and the flashing warning indicator are on, the filter media is likely clogged and the filter cartridge should be replaced.

If the audible alarm sounds and the warning indicator flashes, but the filter status indicator lights on the control panel show that the filter is not clogged, the damper in the extraction arm may be closed, or there may be another obstruction in the extraction hose.

Forced filter cleaning can be performed manually if necessary, using the button for forced filter cleaning (4) on the navigation panel.

Empty the dust collector if necessary; see section **8.4 Emptying the dust collector**.

7 Troubleshooting

Troubleshooting with the power switched on may only be carried out by a licenced electrician.

7.1 Troubleshooting guide

The troubleshooting guide contains information for identifying faults which are simple to rectify. Always perform the troubleshooting procedures before contacting FUMEX.

TROUBLESHOOTING GUIDE		
Symptom	**Possible cause**	**Recommended action**
1. Poor airflow.	Differential pressure gauge not working	Check the differential pressure gauge hoses and hose connections (refer to Section **8.7 Checking air connections**).
	Cleaning not performed	Perform the filter cleaning procedure (refer to Section **6.4 Filter cleaning**).
	Filter cartridge full	Replace filter cartridge.
	HEPA filter full (accessory)	Replace HEPA filter.
	Fan defective	Check fan suction capacity. If the fan is defective, contact Fumex.
	Hose clogged	Clean the hose interior.
	Hole in hose	Replace hose.
2. Material accumulates in the straining compartment.	Wet dust is building up on the walls	Dry dust is being expelled.
	Dust collector full	Check the level in the dust collector, and empty it if necessary.
3. Visible dust on the clean side of the filter unit.	Defective filter cartridge	Replace the defective filter cartridge.
	Filter cartridge incorrectly installed	Install the filter cartridge correctly.
	Incorrect filter material is being used	Contact the customer service/servicing department.
4. Leakage in filter hatch.	Filter hatch incorrectly mounted	Mount the filter cover correctly.
	Gaskets ineffective	Check gaskets and replace if necessary.
5. Dust emitted from the suction opening during and/or after purging.	Damper open	Close damper.
	Defective damper	Replace damper.
6. Ineffective cleaning.	Imprecise cleaning interval	Change time between intervals in the maintenance schedule.
	Filter cartridge full	Replace filter cartridge.
	Filter cartridge incorrectly installed	Install the filter cartridge correctly.
	Defective brushes	Check and clean brushes and replace if necessary
7. Fan has stopped.	Power supply problem	Check power supply.
	Connector short circuit	Check for moisture in the motor connection.
	Stuck impeller	Check for any foreign objects in the fan housing.
		Make sure motor bearings are functioning.
8. Fan performance loss.	Motor winding	Check the resistance between windings.
	Debris	Check for any foreign objects in the fan housing.
	Incorrect rotational direction	Check rotational direction.

8 Maintenance

Please remember that only original spare parts may be used.

Make sure that all moving parts are secured to prevent unintentional movement.

8.1 Cleaning

The product should be cleaned with clean cloths and neutral detergents to avoid damage.

8.2 Maintenance schedule

Depending on the changing operating conditions between the different systems, the intervals for recommended maintenance may differ. Users should therefore determine their own maintenance intervals.

The checklist for maintenance is designed for normal use of the machine. The recommended intervals are approximate and refer to the time after the first start-up.

FUMEX recommends the following maintenance schedule:

MAINTENANCE SCHEDULE				
Interval	**Item**	**Inspection module**	**Maintenance instructions**	**Date**
When necessary	**1.1**	Filter unit CMF	Clean exterior. See section **8.1 Cleaning**.	
	1.2	Extraction arm	Adjust friction joints to the desired resistance.	
Daily	**2.1**	Dust collector	Check the level and empty if necessary.	
	2.2	Filter hatch	Make sure there are no leaks.	
Once a month	**3.1**	Filter cleaning	Check functionality by purging the filter (refer to Section **6.4 Filter cleaning**).	
Every three months	**4.2**	Cartridge filter	Check for dust at the outlet in the clean section. Rectify if necessary.	
Every six months	**5.1**	Electrical equipment	Check all electrical equipment, such as the cabling, plug, power switch, lamp, timer, and motor for visible external damage. Replace if necessary.	
	5.2	Assembly	Check for leaks, damage and wear.	
	5.3	Extraction arm	Make sure there are no leaks.	
	5.4	Dust collector	Make sure there are no leaks.	
	5.5	Motor (fan)	Check functionality. Replace if necessary.	
	5.6	Impeller	Check for any damage and clear away foreign objects if necessary. Replace a damaged impeller.	

8.3 Replacing the filter cartridge

8.3.1 Removal

Save the parts for fitting the new filter cartridge filter.

For **Filter unit CMF 20** the following procedure applies from point 7.

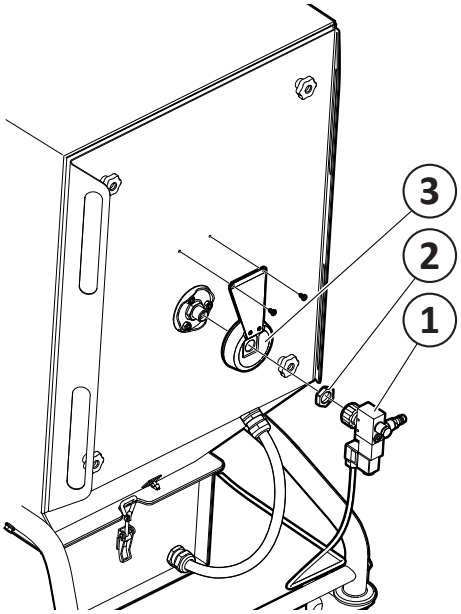

Fig. 18

1. Unscrew the compressed air valve (1, **Fig. 18**).
2. Unscrew the nut (2).
3. Unscrew the contact guard (3).
4. Unscrew the nut (4, **Fig. 19**) for nozzle (9) and remove the washer (5).

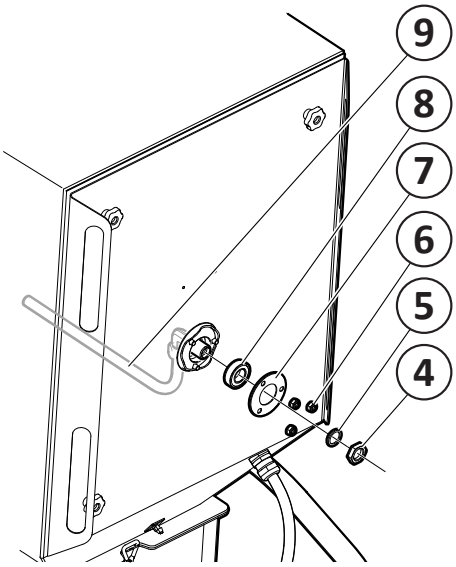

Fig. 19

5. Unscrew the lock nuts (6) for the cover plate (7).
6. Remove the bearings (8).
7. Unscrew the knobs (10, **Fig. 20**) and remove the filter cover (11).

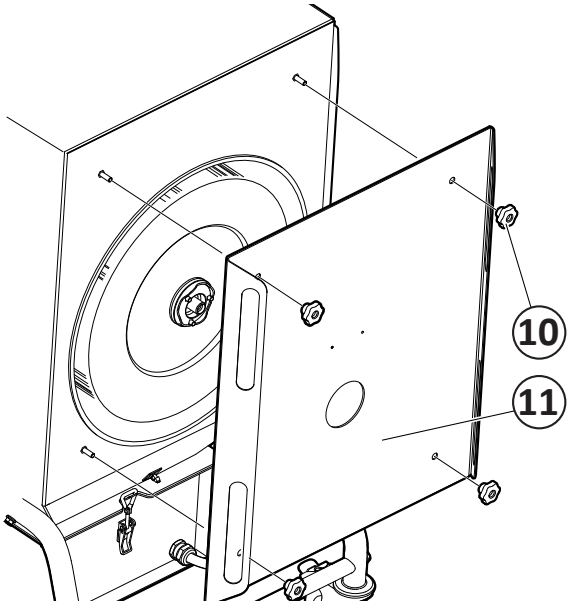

Fig. 20

8. Pull the filter bag CMF PCW3 over the filter cartridge (**Fig. 21**). Make sure the filter bag does not fasten on the brushes under the filter cartridge.

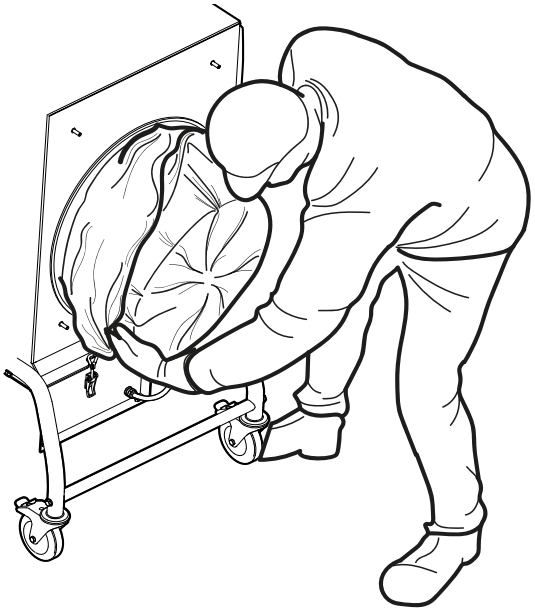

Fig. 21

9. Pull the filter cartridge with the filter bag out of the dirty side of the filter unit. Set it down on the floor with the filter end downwards.
10. Remove the carriage bolts and air tubes from the filter cartridge (**Fig. 22**) for fitting to the new cartridge filter.
11. Seal the filter bag.

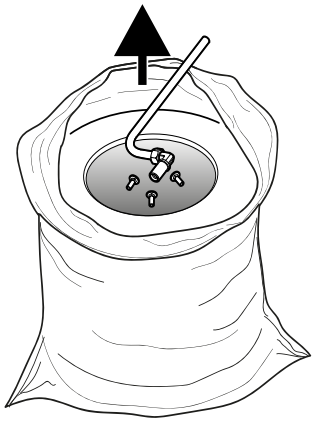

Fig. 22

It is important to ensure that no dust enters the surrounding environment. If dust leaks out and reaches the floor during filter replacement, immediately pick up with a vacuum cleaner fitted with a HEPA filter.

The expended filter cartridge sealed in the bag must then be transported to the final storage location before contaminants and/or dust are able to spread.

8.3.2 Assembly

The filter medium must be intact. There must be no holes.

Note that the filter cartridge lacks contact protection. If handled negligently, the filter medium can be destroyed.

Filter unit CMF 20

1. Refit the carriage bolts (pos 1, **Fig. 23**) inside the filter cartridge.
2. Refit the cover plate (2) and secure with the lock nuts (3).
3. Carefully insert the new filter cartridge horizontally until the crank rim drops down from the filter brushes (**Fig. 24**).

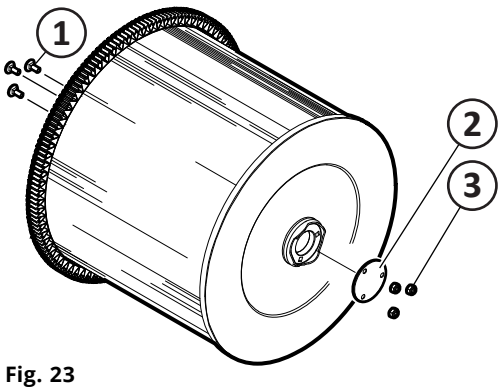

Fig. 23

4. Push in the bottom edge of the filter end until the cartridge is centred on the fan intake.

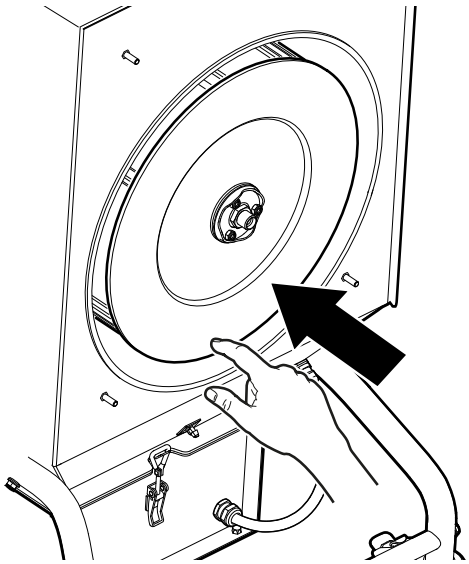

Fig. 24

Check that the filter cover gasket has not been damaged. Replace as necessary.

5. Refit and secure the filter cover (10, **Fig. 20**) on the chassis. Check that the filter cartridge is centred on the hole in the filter cover and that the seal between the cover and chassis correct.

Filter unit CMF 30

6. Refit the carriage bolts (pos 1, **Fig. 25**) and nozzle (2) inside the filter cartridge.
7. Fit the bearings (3), refit the cover plate (4) and secure with the lock nuts (5).
8. Screw the nozzle (2) in place with the washer (6) and nut (7).
9. Carefully insert the new filter cartridge horizontally until the crank rim drops down from the filter brushes (**Fig. 24**).

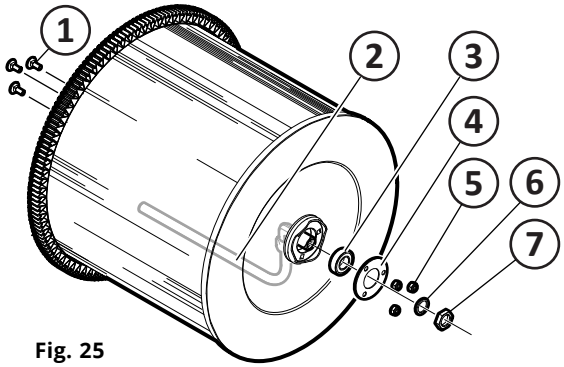

Fig. 25

10. Push in the bottom edge of the filter end until the cartridge is centred on the fan intake.

Check that the filter cover gasket has not been damaged. Replace as necessary.

11. Refit and secure the filter cover (10, **Fig. 20**) on the chassis. Check that the filter cartridge is centred on the hole in the filter cover and that the seal between the cover and chassis correct.

12. Refit the contact guard (3, **Fig. 18**), nut (2) and compressed air valve (1).

8.4 Emptying the dust collector

It is important to ensure that no dust enters the surrounding environment. If dust reaches the floor when emptying the dust collector, immediately pick up with a vacuum cleaner fitted with a HEPA filter.

The dust collector should be emptied regularly to the dust collector and/or dust bag from becoming too heavy for normal manual handling (max. 20 kg).

If there is no pallet truck available, the CFE HS accessory can be used when detaching the dust collector.

Check that the dust collector seal has not become damaged.
Replace the seal if necessary.

1. Manoeuvre a suitable pallet truck underneath the dust collector, see **Fig. 26**.

2. Unscrew the pressure distribution hose from the dust collector.

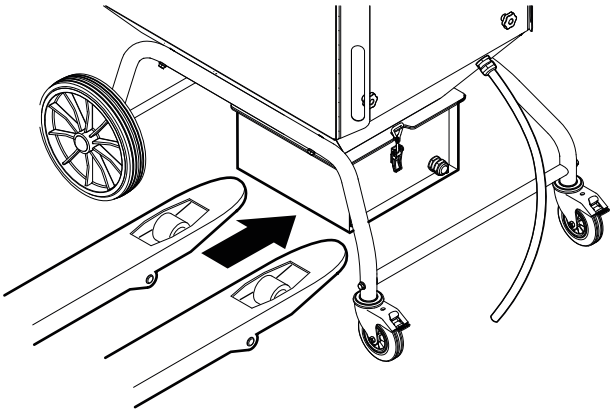

Fig. 26

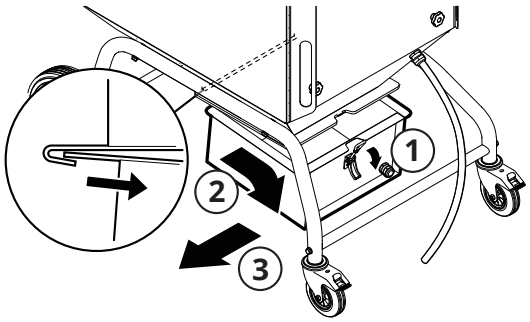

Fig. 27

3. Loosen the eccentric lock, raise the pallet truck up to the dust collector and use the pallet truck to pull put the collector. See **Fig. 27** as reference.

4. Seal the dust bag and carefully remove it from the dust collector. Dispose of the dust bag according to applicable laws and regulations.

5. If necessary, clean the dust collector.

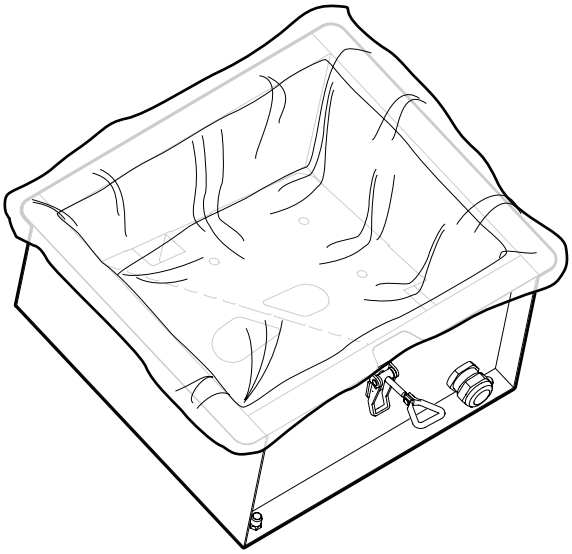

Fig. 28

6. Place an new Dust Bag CMF PSW3 correctly into the dust collector, see **Fig. 28**.

7. Slide the dust collector under the straining compartment, see **Fig. 27** as reference.

8. Hook the eccentric lock into its hook and tighten. If necessary, adjust the eccentric lock.

9. Screw the pressure distribution hose to the dust container.

8.5 Extraction arm

Adjusting friction joints

Adjust the friction joints as shown in **Fig. 13** and **Fig. 14.**

8.6 Checking air connections

1. Unscrew the top panel and set down on the exhaust grate without disconnecting the electrical connectors.
2. Make sure that the hoses to the differential pressure gauge are correctly connected and that there is no debris in the hoses. Rectify if necessary.
3. Refit the top panel.

9 Decommissioning

9.1 Final decommissioning/ disassembly/disposal

Final decommissioning and disassembly of the product may only be done by authorized personnel wearing protective gear. The handling and correct removal of the various types of materials must be in accordance with the applicable legal requirements.

Please contact FUMEX if you have any questions about the various types of waste.

10 Technical information

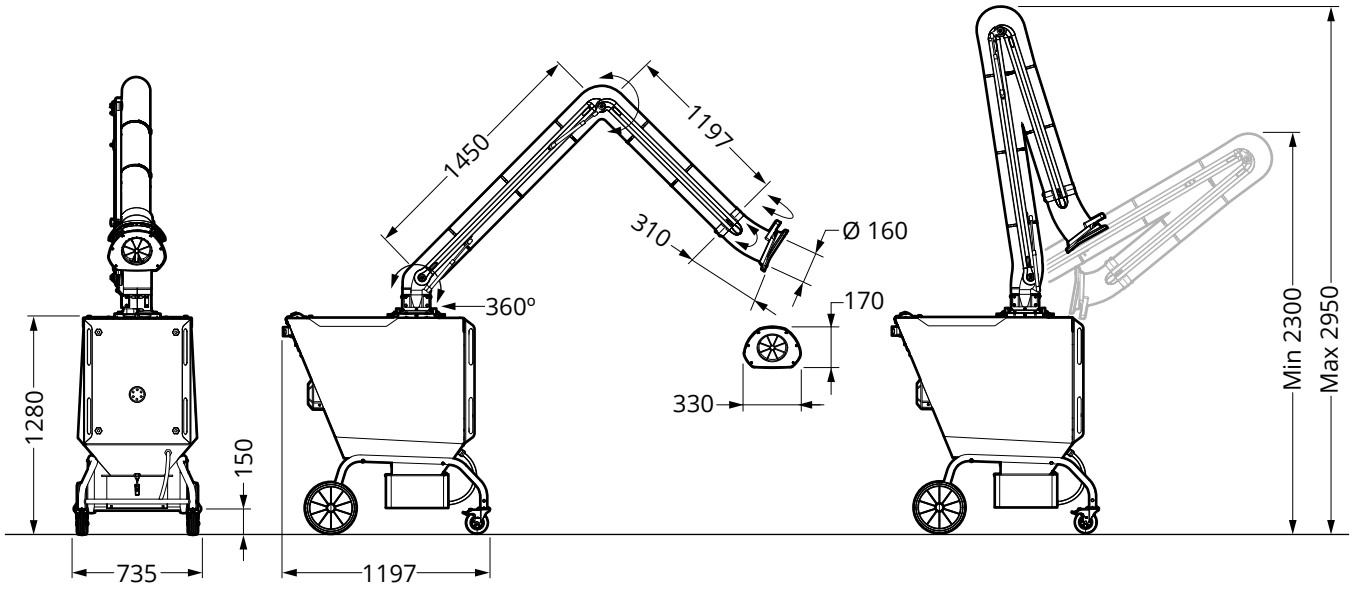

Fig. 29

10.1 Technical data

Dimensions: ..... See **Fig. 25**
Weight (CMF 20/CMF 30): ..... 146 kg/147 kg
Voltage: ..... 400 V 3~
Frequency:..... 50 Hz
Power: ..... 1,5 kW
Current:..... 7,7 A
Inlet pressure*:..... <10 bar
Enclosure class: IP54
Fuse (circuit board):..... 5 A 250 V AC 5x20 mm
MCB (socket 230 V):..... 10 A
Number of filter cartridges:..... 1
Filter area: ..... 14 m^2
Max airflow: ..... 1800 m^3/h

Sound level
Standard: ..... 75 dB (A)
With Silencer CMF SI: ..... -4 dB (A)
With Silencer CMF SI and CMF SE: -3 dB (A)

Temperature limits
Operating temperature:..... +5 °C till +60 °C
Ambient temperature: ..... +5 °C till +50 °C
Transport & storage temperature: -25 °C till +60 °C
Max. humidity:..... 80 %

Alarm limits for filter cleaning
Audiable alarm: ..... 1600 Pa (~600 m^3/h)

** Only applies to CMF 30*

10.2 Circuit diagram electronics

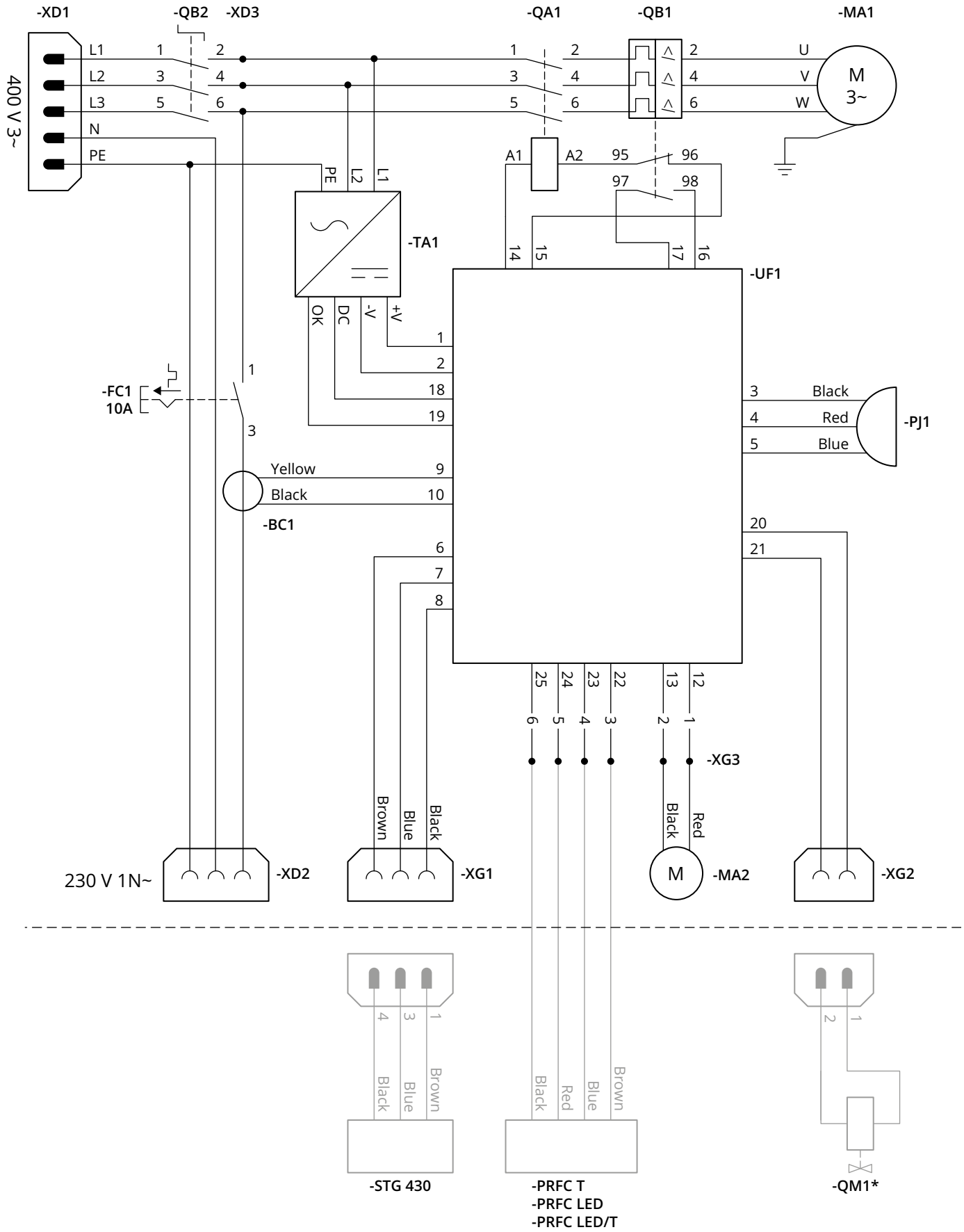

** Only applies to CMF 30*

10.3 Exploded-view drawing

10.3.1 Filter unit CMF 20

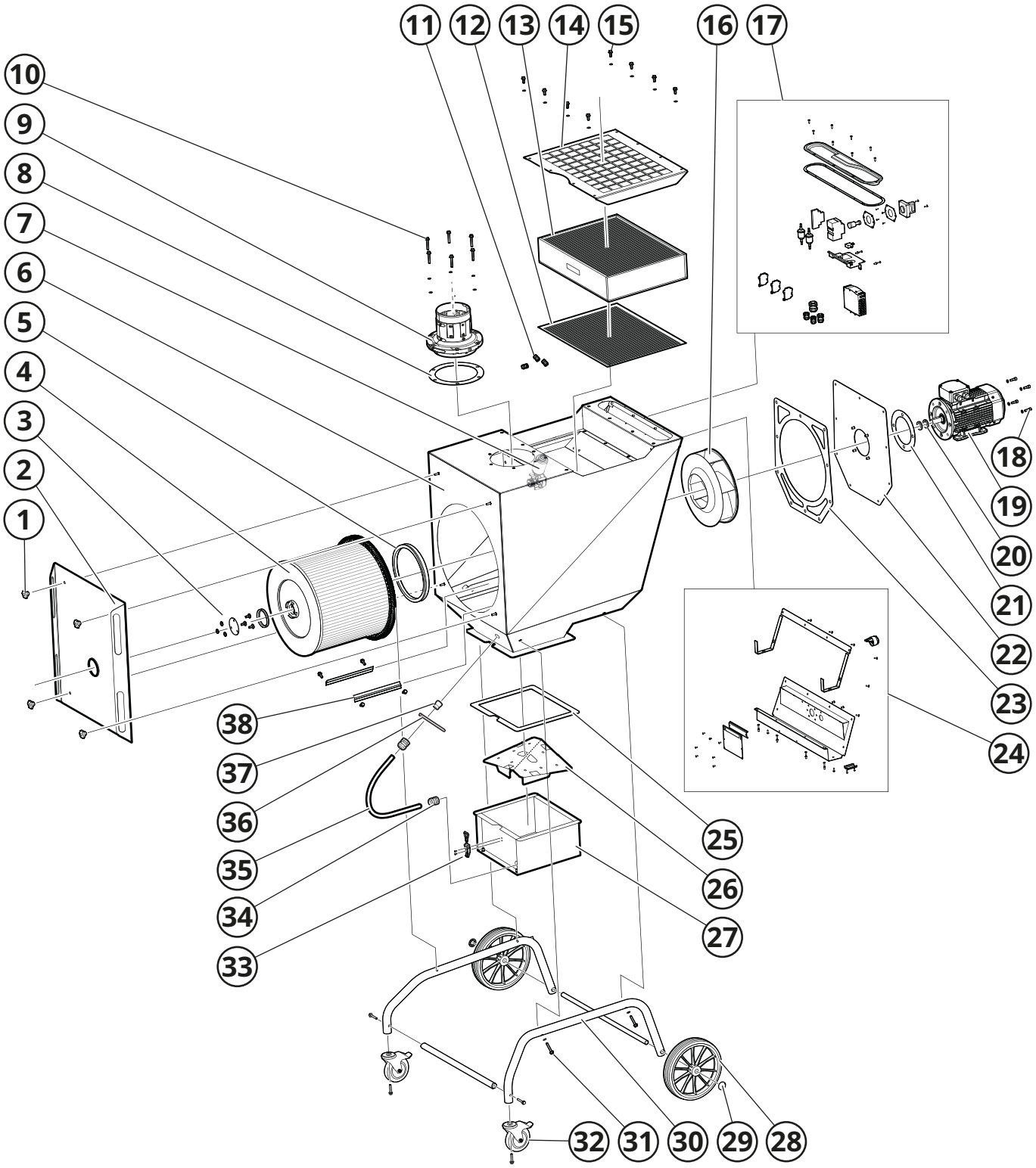

10.3.2 Filter unit CMF 30

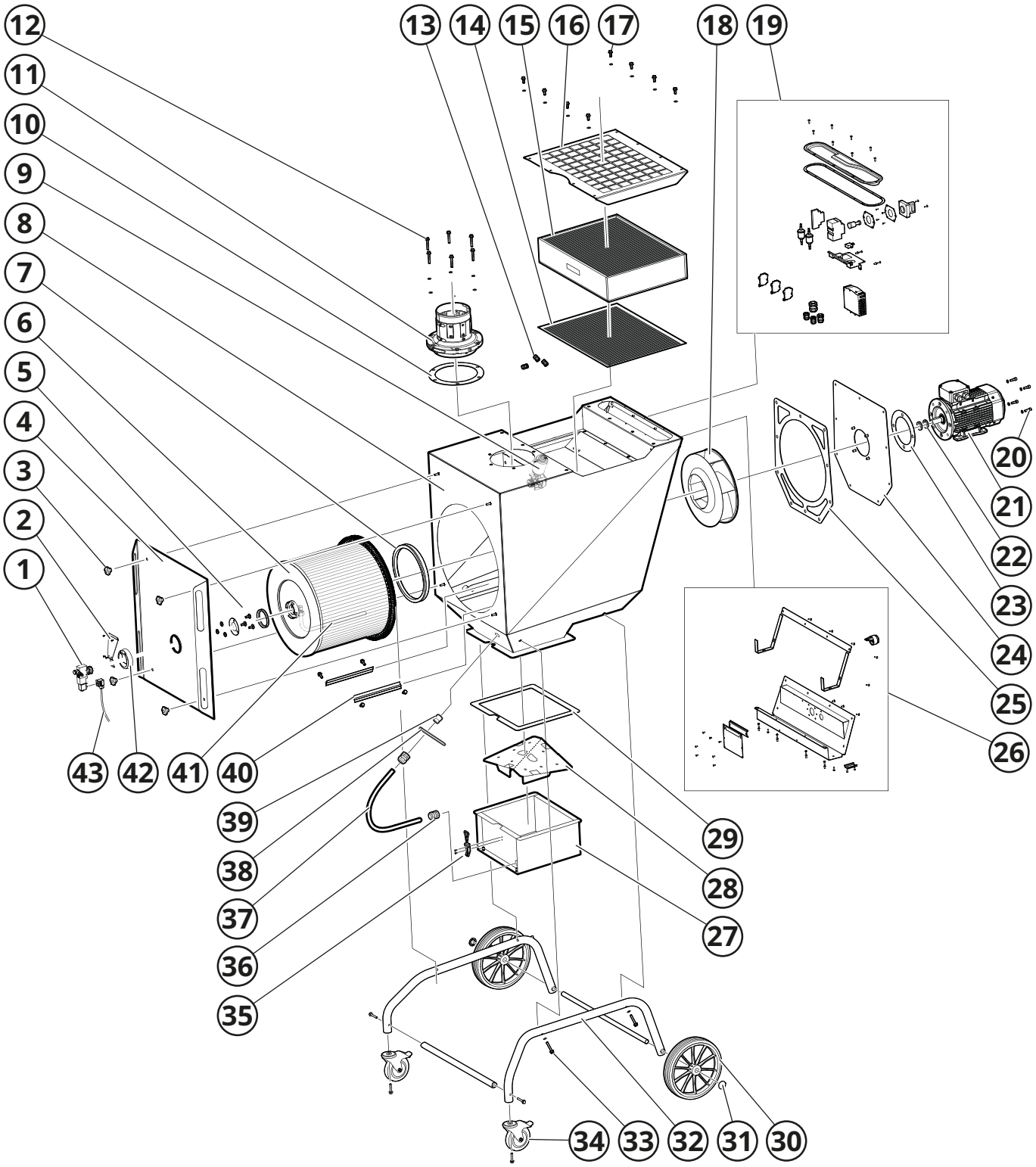

10.3.3 Extraction Arm

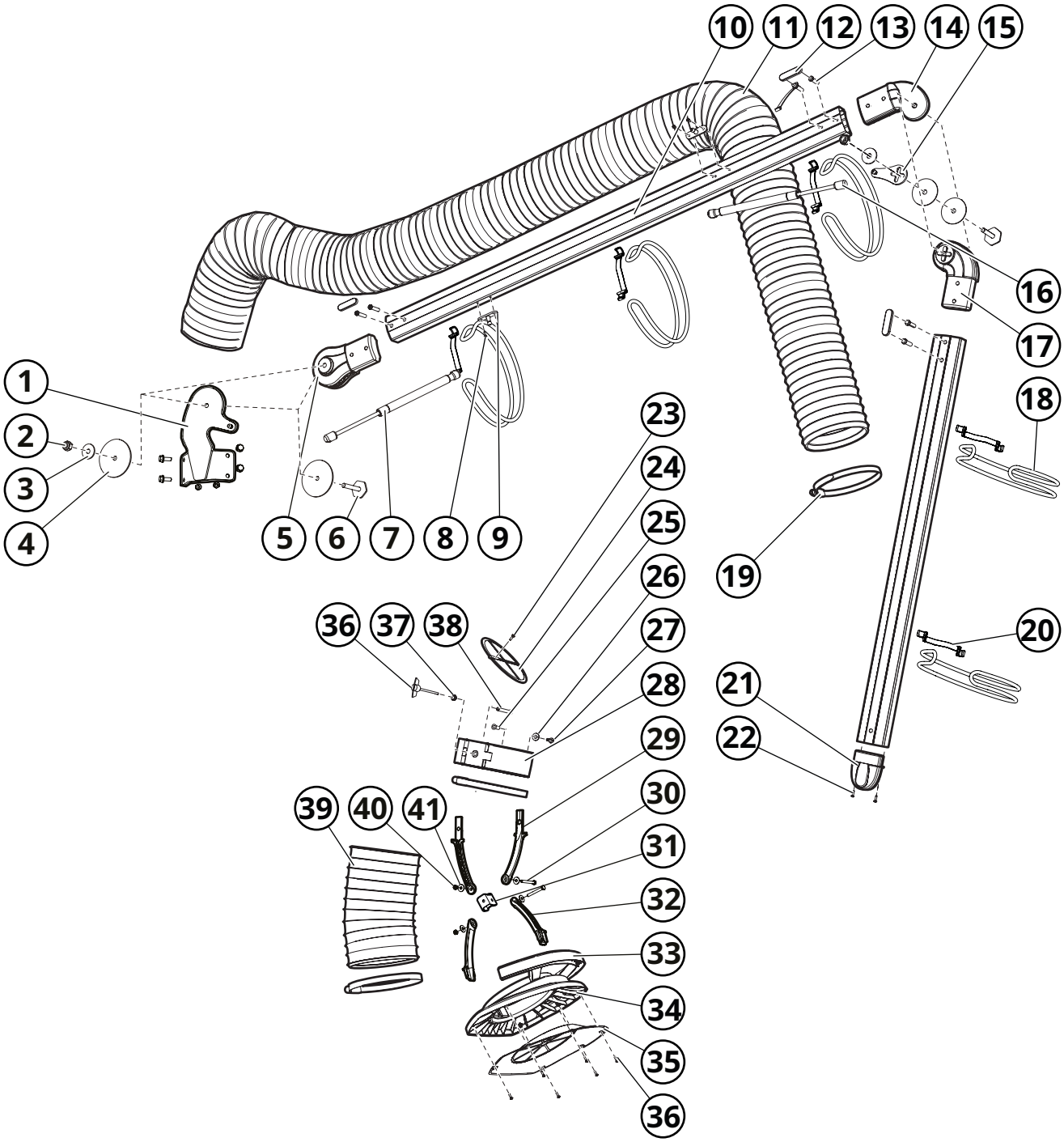

11 Accessories & Spare Parts

Silencer CMF SI

Reduces the operating noise of the machine. Can be combined with Silencer CMF SE.

Fig. 30

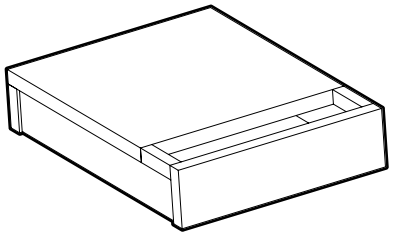

Silencer CMF SE

Reduces the operating noise of the machine. Can be combined with Silencer CMF SI or HEPA filter CFH.

Fig. 31

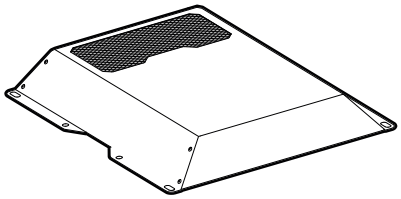

HEPA Filter CFH 120

Filters the finest particles according to HEPA 14, before the air recirculates from the filter. Top mounted on the filter unit.

Fig. 32

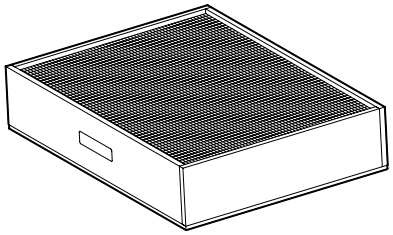

Filter Cartridge CFS 140W3

Filter cartridge for use during normal loads in ISO 15012-1 systems for safety during welding. The filter consists of a corrugated polyester material coated with a Teflon membrane that is protected by expanded metal on the inside.

The purchase of CFS 140W3 includes Filter Bag CFE PCW3.

Fig. 33

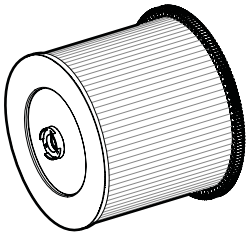

Spark Trap PR ST

Protects the filter from large particles and reduces the risk of sparks.

Fig. 34

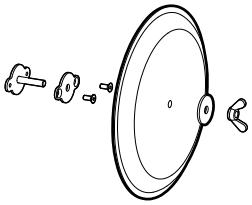

CMF PCW3

Filter bag for contact-free filter cartridge replacement.

Fig. 35

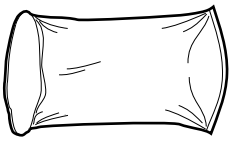

CMF PSW3

Dust bag for contact-free dust collector emptying.

Fig. 36

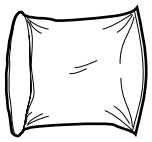

CFE HS

Wheel set for dust collector emptying.

Fig. 37

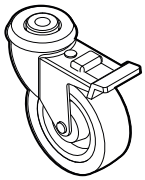

Filter Brush CMF 137568

Brushes (2-pack) that remove particles and dust from the filter medium during filter cleaning.

Fig. 38

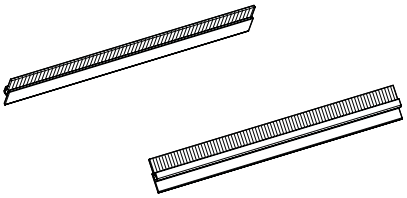

Extension Hose PFS-160

Enables work in difficult and remote areas. With magnetic nozzle and quick coupling. Available in lengths of 4 metres and 8 metres.

Fig. 39

Pliers Sensor STG 430

For automatic START/STOP of the filter unit.

Fig. 40

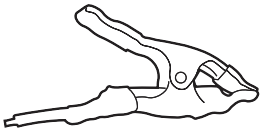

12 Notes

EXTRACTION ARMS · VEHICLE EXHAUST EXTRACTION · FANS · FILTERS · CURTAINS · CONTROLS

FUMEX

G:a Burträskvägen 48, 931 92 Skellefteå, Sweden • Tel.: +46 910-361 80 • Fax: +46 910-130 22 • E-mail: info@fumex.se
www.fumex.com